# AVERY DENNISON MARKETING SPECIFICATION

THE SUBJECT MATTER DISCLOSED HEREIN EMBODIES PROPRIETARY INFORMATION WHICH IS THE CONFIDENTIAL PROPERTY OF THE AVERY DENNISON CO. NONE OF WHICH SHALL BE COPIED, REPRODUCED, DISCLOSED TO OTHERS, PUBLISHED OR USED IN WHOLE OR IN PART, FOR ANY PURPOSE OTHER THAN THAT FOR WHICH IT IS BEING MADE AVAILABLE WITHOUT THE EXPRESS ADVANCE WRITTEN PERMISSION OF A DULY AUTHORIZED AGENT OF THE COMPANY. THIS DOCUMENT IS THE PROPERTY OF THE AVERY DENNISON CO. AND IS TO BE RETURNED TO THE COMPANY ON DEMAND.

HISTORY

| REV. | DATE | DESCRIPTION |
|---|---|---|
| A | 10/13/06 | RELEASE TO PRODUCTION |
| B | 06/01/07 | NEW PRODUCTION TOOL DELETED INS/EXT TABLE |
| C | 05.04.12 | UPDATED THE TEMP SPEC. TO REFLECT WHAT PRODUCT WAS TESTED AT. |

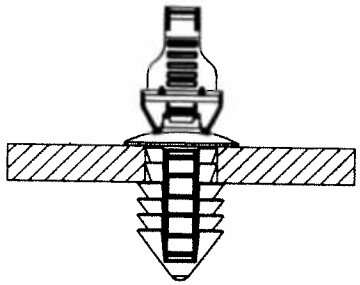

**ASSEMBLED VIEW**

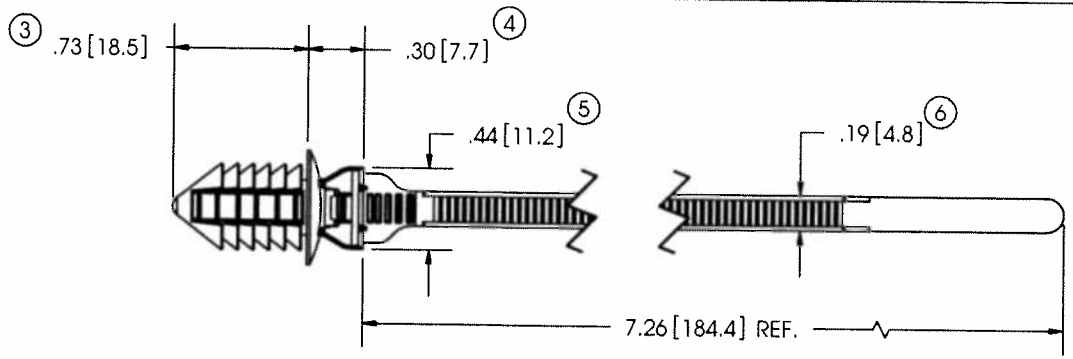


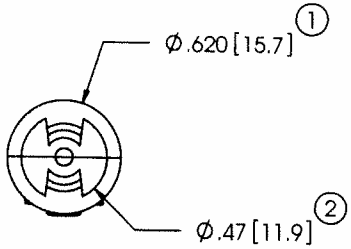


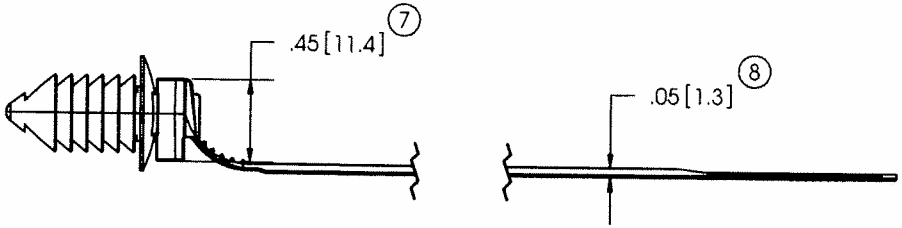


| | |
|---|---|
| MOUNTING: | Ø10MM ± 0.25 HOLE IN 0.7MM TO 5MM THICK PANEL. |
| TENSILE STRENGTH: | 50 LBF / 22.7 KGF MIN. |
| OPERATING TEMP. RANGE: | -40°F (-40°C) TO 257°F (125°C) |
| WEIGHT: | 2.1 GRAMS |
| BUNDLE DIAMETER: | Ø1.6MM TO Ø44.5MM |
| TOOL: | TOOL, HAND ADJUSTABLE, FOR PLASTIC TIE DOWN STRAP. AVERY DENNISON PART NO. 12001-0 |
| TOOL TENSION SETTING: | 6 - 8 |
| PACKAGING: | 500/BAG, 10 BAGS/MASTER |

APPROVALS: ENG. APPR. 5/4/12 Q.A. APPR. 5/7/2012

SPECIFIED TOLERANCES ARE:
.XX ± .02 INCHES .X ± .5 MM
.XXX ± .01 INCHES .XX ± .25 MM
ANGULAR: ± 2°

MATERIAL: NYLON 6/6, IMPACT MOD, HEAT STAB.

COLOR: BLACK

AVERY DENNISON
FASTENER DIVISION
FITCHBURG, MA 01420 U.S.A.
TEL. 1-800-225-5913
FAX. 978-353-8157

DESCRIPTION: 10MM FIR TREE CURVED TIE, BLACK

STOCK NO.: 20103-0

REV.: C

5 4 3 2 1